Installation Procedure

Watson Bowman Acme Corp. 95 Pineview Drive Amherst, NY 14228
phone: (716) 691-7566 fax: (716) 691-9239
website: www.wbacorp.com

Information provided herein, including but not limited to, any drawing, design, photograph, graphic, or statement(s) ("Materials") are proprietary and the property of Watson Bowman Acme Corporation ("Company"). Reproduction, translation, or reduction to any electronic medium or machine readable form, in whole or part, is strictly prohibited, except for the express purpose for which it has been furnished, without prior written consent of Company. All Materials contained herein are provided by Company for information purposes only. Company reserves the right to amend or withdraw any information contained in the Materials without notice. All technical or other advice by Company, whether verbal or written, concerning products, or the use of products in specific situations ("Advice") is given by Company and is used at the Users own risk.

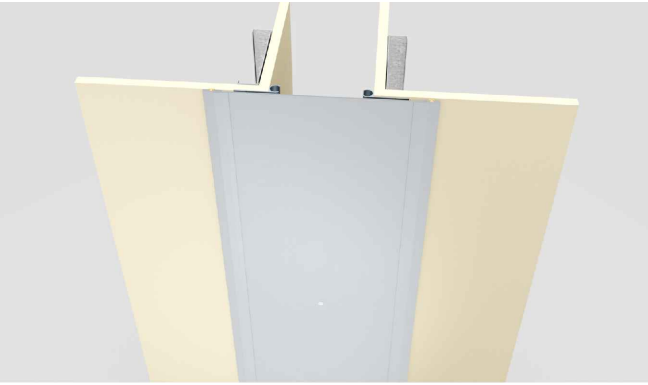

Model WFT - Wall to Wall Condition

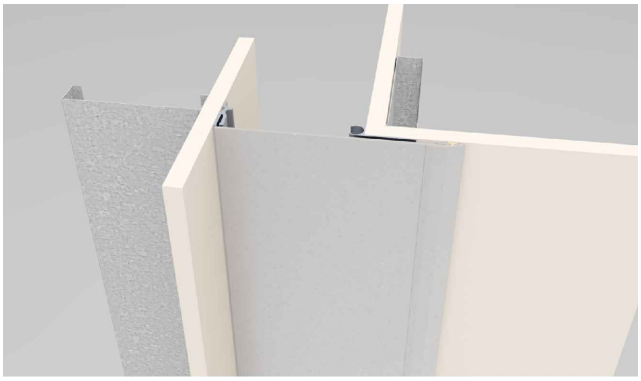

Model WFT-C - Wall to Corner Condition

Wabo® SeismicCover
Model(s) WFT and WFT-C
Vertical Expansion Control System

The following installation procedure is very important and must be fully understood prior to beginning any work. To ensure proper installation and performance of expansion joint system the following actions must be completed by the installing contractor. Failure to do so will affect product warranty.

1) Carefully read and understand installation procedure. Contact WBA's Technical Service Department at (800) 677-4922 for product assistance.
2) Inspect all shipments and materials for missing or damaged components and hardware. Contact Customer Service at (800) 677-4922 with WBA's order number and invoice for prompt assistance.
3) Inspect substrate or adjacent construction for acceptance before beginning work. Report unacceptable construction to the project manager for scheduled repair work.
4) Review WBA shop drawings for project specific detailed information if Engineering services were purchased at time of order.

Issued: 03/21/23 p/n: 20194

Standard components

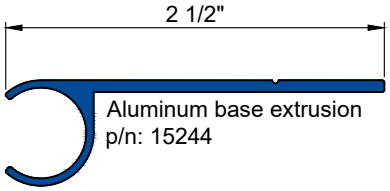

Aluminum base extrusion
p/n: 15244

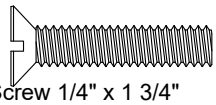

Screw 1/4" x 1 3/4"
p/n: 5621

INS seal strip
p/n: 2838

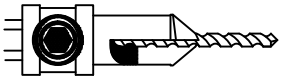

Special countersink bit
p/n: 20650

Aluminum Wall Mount Extrusion
Corner Applications only
p/n: 17032

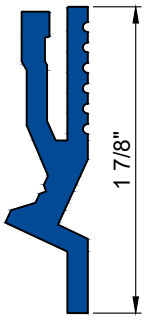

Components shown below vary in size depending on model of system

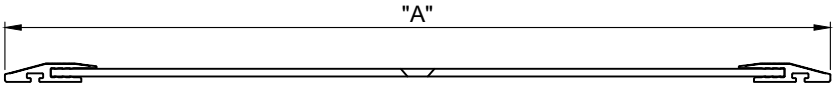

Coverplate - flush condition

Model #	Part #	"A" dim.
WFT-400	15400	13 1/2"
WFT-600	15400	13 1/2"
WFT-800	15401	17 1/2"
WFT-1000	15402	21 1/2"
WFT-1200	15403	25 1/2"
WFT-1800	15404	37 1/2"
WFT-2400	15405	49 1/2"

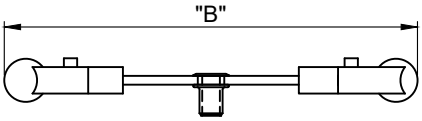

Self-center bar - flush condition

Model #	Part #	"B" dim.
WFT-400	15643	12 3/8"
WFT-600	15643	12 3/8"
WFT-800	15630	18 3/8"
WFT-1000	15631	22 3/8"
WFT-1200	15603	26 3/8"
WFT-1800	15604	38 3/8"
WFT-2400	15641	50 3/8"

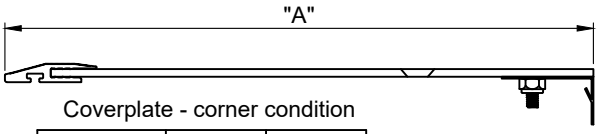

Coverplate - corner condition

Model #	Part #	"A" dim.
WFT-400C	15399	6 5/8"
WFT-600C	15406	9 5/8"
WFT-800C	15407	12 5/8"
WFT-1000C	15408	15 5/8"
WFT-1200C	15409	18 5/8"
WFT-1800C	15410	27 5/8"
WFT-2400C	15411	36 5/8"

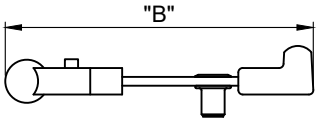

Self-center bar - corner condition

Model #	Part #	"B" dim.
WFT-400C	15658	9"
WFT-600C	15658	9"
WFT-800C	15659	12"
WFT-1000C	15660	14"
WFT-1200C	15661	16"
WFT-1800C	15663	22"
WFT-2400C	15665	28"

Watson Bowman Acme Corp.
95 Pineview Drive Amherst, NY 14228
phone: (716) 691-7566 fax: (716) 691-9239
website: www.wbacorp.com

Installation procedure: WFT SeismicCover system

Information provided herein, including but not limited to, any drawing, design, photograph, graphic, or statement(s) ("Materials") are proprietary and the property of Watson Bowman Acme Corporation ("Company"). Reproduction, translation, or reduction to any electronic medium or machine readable form, in whole or part, is strictly prohibited, except for the express purpose for which it has been furnished, without prior written consent of Company. All Materials contained herein are provided by Company for information purposes only. Company reserves the right to amend or withdraw any information contained in the Materials without notice. All technical or other advice by Company, whether verbal or written, concerning products, or the use of products in specific situations ("Advice") is given by Company and is used at the Users own risk.

Watson Bowman Acme®

Flush condition

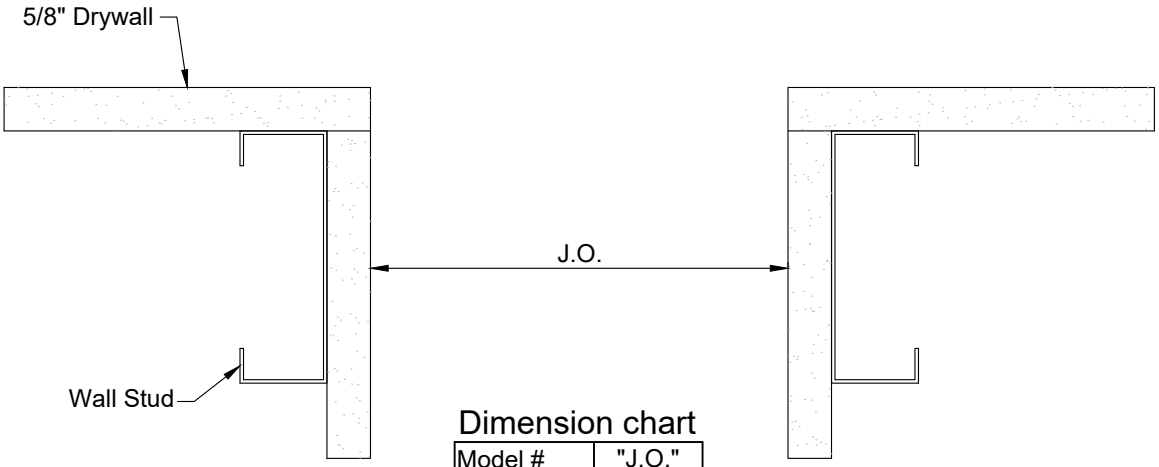

Dimension chart

Model #	"J.O."
WFT-400	4"
WFT-600	6"
WFT-800	8"
WFT-1000	10"
WFT-1200	12"
WFT-1800	18"
WFT-2400	24"

1 Prior to begining work, installer shall inspect for proper wall construction. Verify joint opening is as called for on chart.

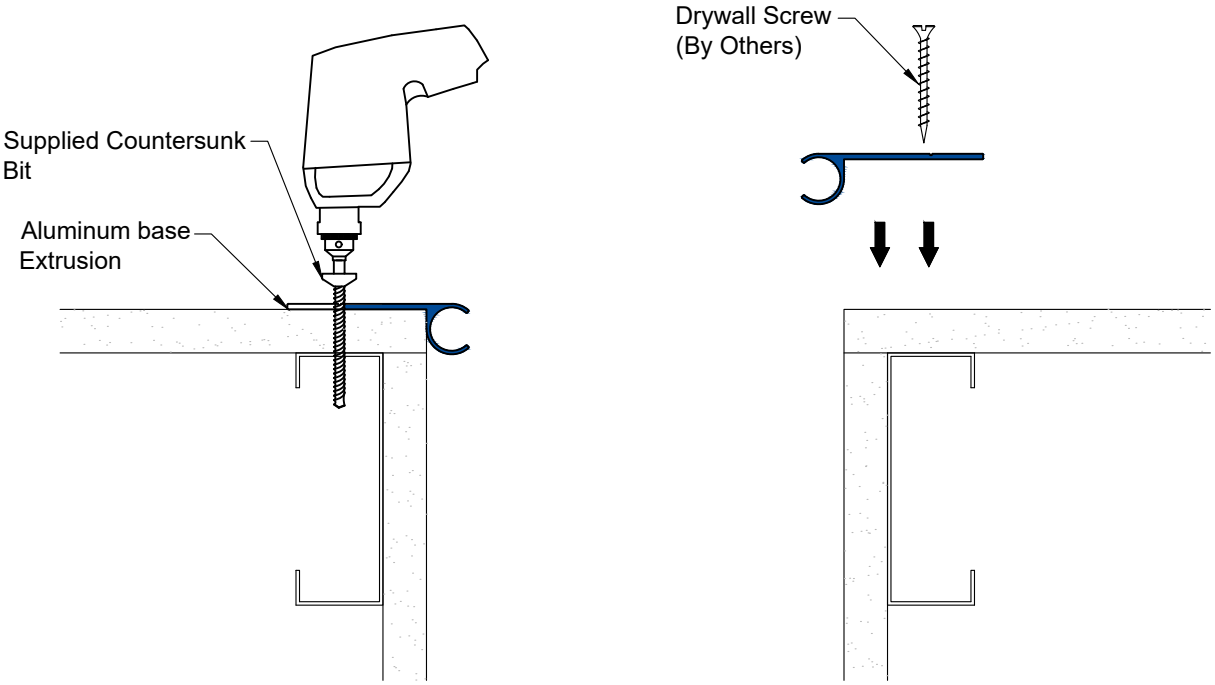

2 Place aluminum wall extrusion on edge of opening as shown. Utilizing supplied countersink bit drill through extrusion and drywall into stud. Fasten with drywall screws (By Others) spaced at 18" o.c. maximum, start 6" from ends.
NOTE: See step 3 next page before installing all base members.

Watson Bowman Acme Corp.
95 Pineview Drive Amherst, NY 14228
phone: (716) 691-7566 fax: (716) 691-9239
website: www.wbacorp.com

Installation procedure: WFT SeismicCover system

Information provided herein, including but not limited to, any drawing, design, photograph, graphic, or statement(s) ("Materials") are proprietary and the property of Watson Bowman Acme Corporation ("Company"). Reproduction, translation, or reduction to any electronic medium or machine readable form, in whole or part, is strictly prohibited, except for the express purpose for which it has been furnished, without prior written consent of Company. All Materials contained herein are provided by Company for information purposes only. Company reserves the right to amend or withdraw any information contained in the Materials without notice. All technical or other advice by Company, whether verbal or written, concerning products, or the use of products in specific situations ("Advice") is given by Company and is used at the Users own risk.

Watson Bowman Acme Corp.
95 Pineview Drive Amherst, NY 14228
phone: (716) 691-7566 fax: (716) 691-9239
website: www.wbacorp.com

Installation procedure: WFT SeismicCover system

Information provided herein, including but not limited to, any drawing, design, photograph, graphic, or statement(s) ("Materials") are proprietary and the property of Watson Bowman Acme Corporation ("Company"). Reproduction, translation, or reduction to any electronic medium or machine readable form, in whole or part, is strictly prohibited, except for the express purpose for which it has been furnished, without prior written consent of Company. All Materials contained herein are provided by Company for information purposes only. Company reserves the right to amend or withdraw any information contained in the Materials without notice. All technical or other advice by Company, whether verbal or written, concerning products, or the use of products in specific situations ("Advice") is given by Company and is used at the Users own risk.

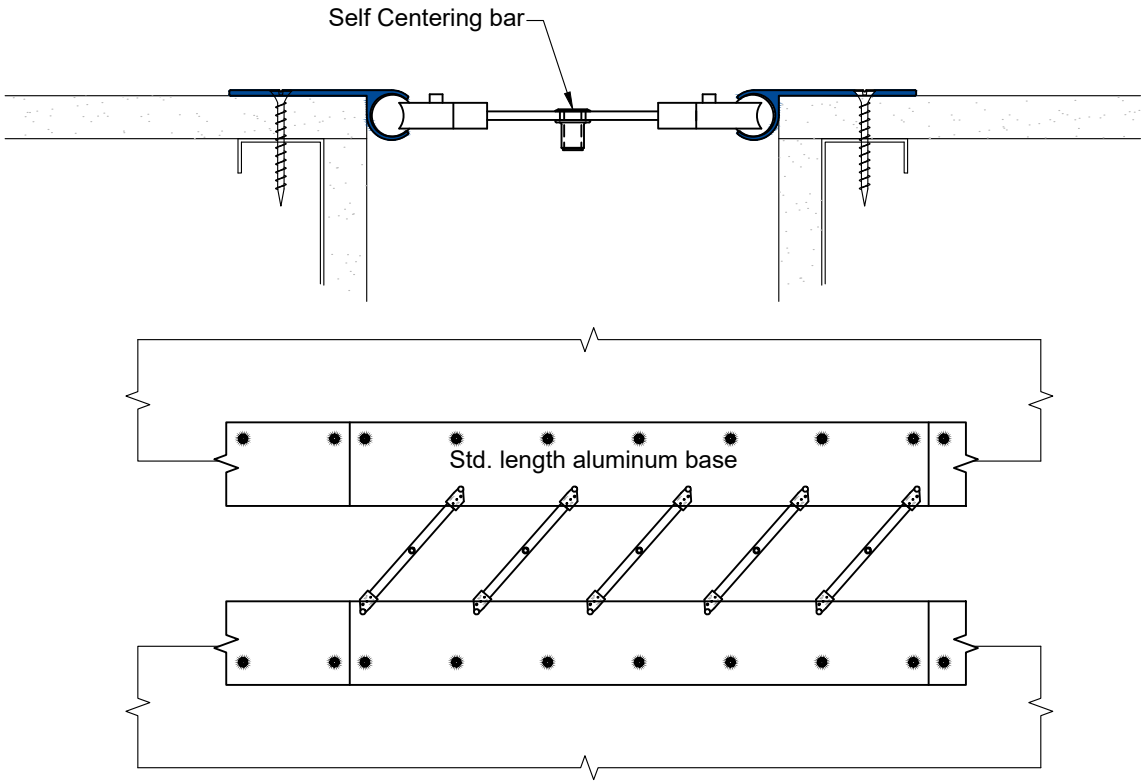

Typical self-center bar layout

3 As you install aluminum base member sections, slide self-center bars into circular cavities. Make sure that "TOP" indicator is facing out and that all bars are in same orientation. Utilizing duct tape or something simular put a small strip on bar to hold spacing at 24" o.c.

4 Slide gasket into coverplate

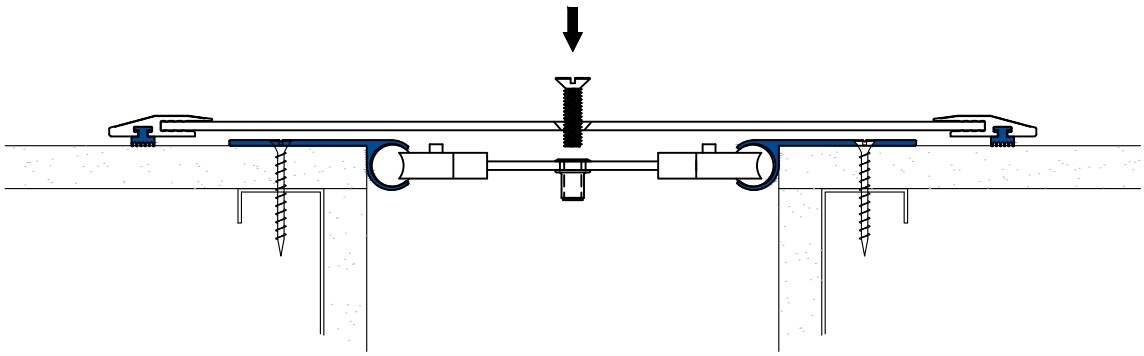

5 Center coverplate over joint opening, aligning the holes for the self-centering bars over the previously installed bars. Insert the 1/4" x 1 1/4" csk flathead machine screw through the cover into self-centering bars. Tighten to create measurable tension in bar.

Corner condition

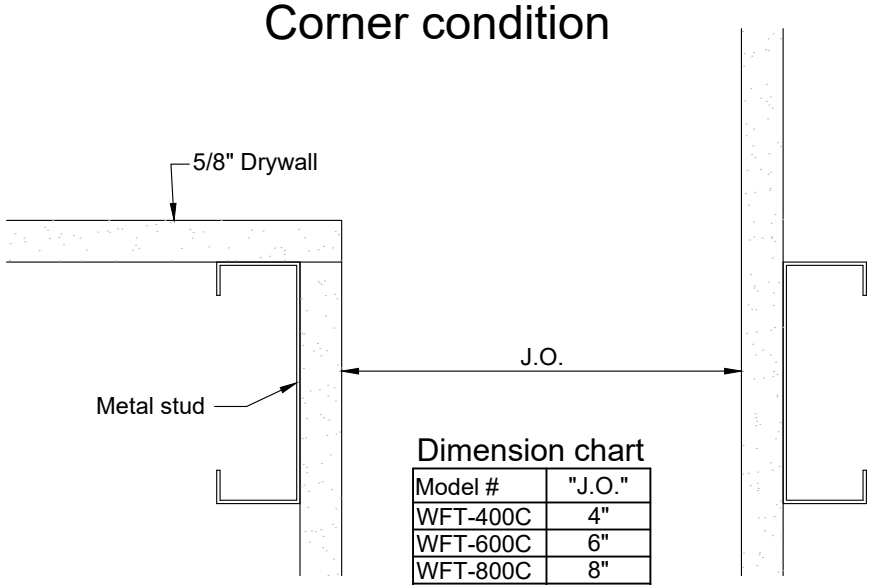

Dimension chart

Model #	"J.O."
WFT-400C	4"
WFT-600C	6"
WFT-800C	8"
WFT-1000C	10"
WFT-1200C	12"
WFT-1800C	18"
WFT-2400C	24"

1 Prior to begining work, installer shall inspect for proper wall construction. Verify joint opening is as called for on chart.

A)

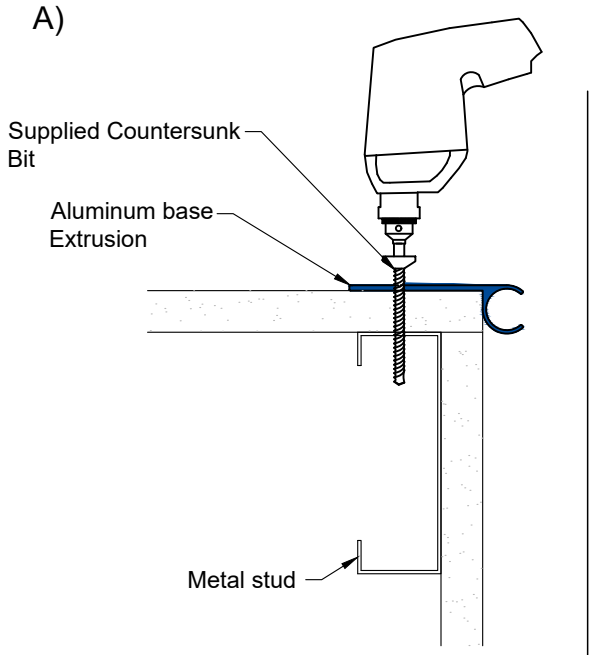

B)

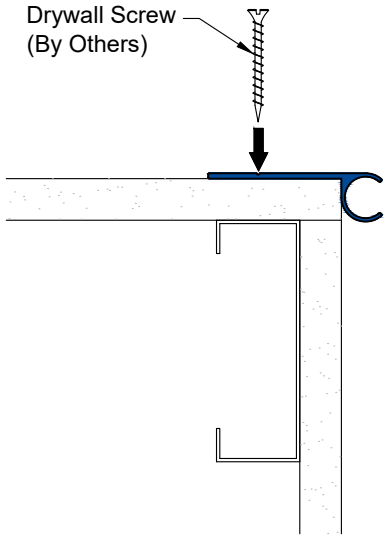

2 A) Place aluminum wall extrusion on edge of opening as shown. Utilizing supplied countersink bit drill through extrusion and drywall into stud.
B) Fasten with drywall screws (By Others) spaced at 18" o.c. maximum, start 6" from ends.
NOTE: See step 6 before installing all base members.

Watson Bowman Acme Corp.
95 Pineview Drive Amherst, NY 14228
phone: (716) 691-7566 fax: (716) 691-9239
website: www.wbacorp.com

Installation procedure: WFT SeismicCover system

Information provided herein, including but not limited to, any drawing, design, photograph, graphic, or statement(s) ("Materials") are proprietary and the property of Watson Bowman Acme Corporation ("Company"). Reproduction, translation, or reduction to any electronic medium or machine readable form, in whole or part, is strictly prohibited, except for the express purpose for which it has been furnished, without prior written consent of Company. All Materials contained herein are provided by Company for information purposes only. Company reserves the right to amend or withdraw any information contained in the Materials without notice. All technical or other advice by Company, whether verbal or written, concerning products, or the use of products in specific situations ("Advice") is given by Company and is used at the Users own risk.

3 Slide gasket into coverplate

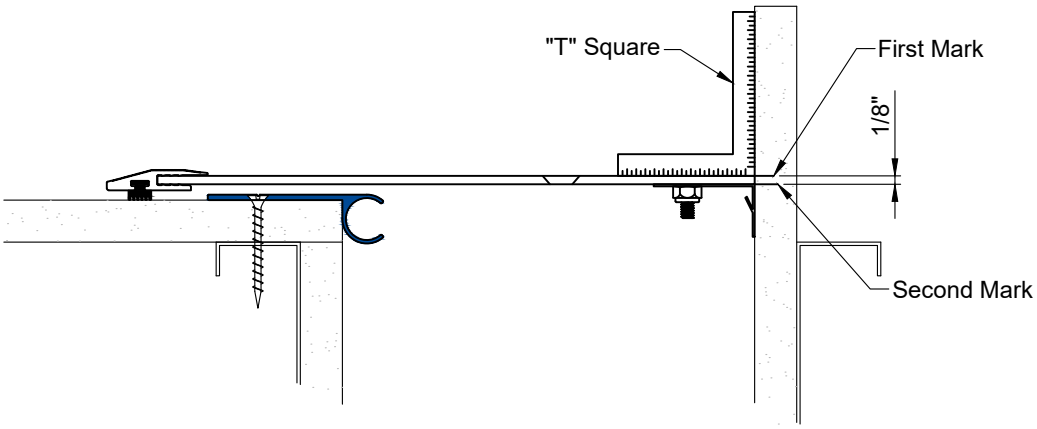

4 Position coverplate onto system as shown until gasket sits firmly against wall. Utilize a T-square to mark a line on wall flush with coverplate. Remove coverplate and make a second mark parallel to first but 1/8" into joint opening.

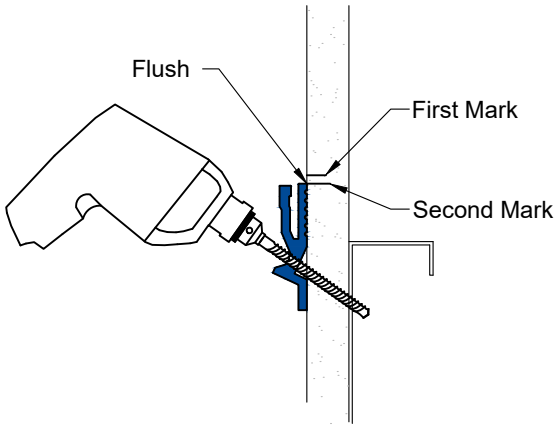

A)

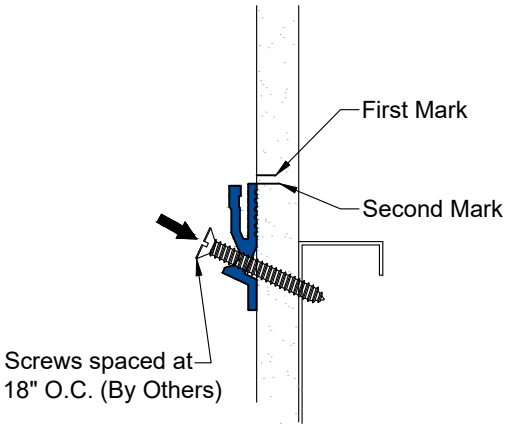

B)

5 A) Position aluminum wall extrusion flush with the second line drawn. Drill through aluminum wall extrusion into adjacent wall at 18" on center.
B) Fasten aluminum wall extrusion to wall with at least 1/4" x 2" screws (By Others).
Note: screw must fasten into wall stud.

Watson Bowman Acme Corp.
95 Pineview Drive Amherst, NY 14228
phone: (716) 691-7566 fax: (716) 691-9239
website: www.wbacorp.com

Installation procedure: WFT SeismicCover system

Information provided herein, including but not limited to, any drawing, design, photograph, graphic, or statement(s) ("Materials") are proprietary and the property of Watson Bowman Acme Corporation ("Company"). Reproduction, translation, or reduction to any electronic medium or machine readable form, in whole or part, is strictly prohibited, except for the express purpose for which it has been furnished, without prior written consent of Company. All Materials contained herein are provided by Company for information purposes only. Company reserves the right to amend or withdraw any information contained in the Materials without notice. All technical or other advice by Company, whether verbal or written, concerning products, or the use of products in specific situations ("Advice") is given by Company and is used at the Users own risk.

Watson Bowman Acme Corp.
95 Pineview Drive Amherst, NY 14228
phone: (716) 691-7566 fax: (716) 691-9239
website: www.wbacorp.com

Installation procedure: WFT SeismicCover system

Information provided herein, including but not limited to, any drawing, design, photograph, graphic, or statement(s) ("Materials") are proprietary and the property of Watson Bowman Acme Corporation ("Company"). Reproduction, translation, or reduction to any electronic medium or machine readable form, in whole or part, is strictly prohibited, except for the express purpose for which it has been furnished, without prior written consent of Company. All Materials contained herein are provided by Company for information purposes only. Company reserves the right to amend or withdraw any information contained in the Materials without notice. All technical or other advice by Company, whether verbal or written, concerning products, or the use of products in specific situations ("Advice") is given by Company and is used at the Users own risk.

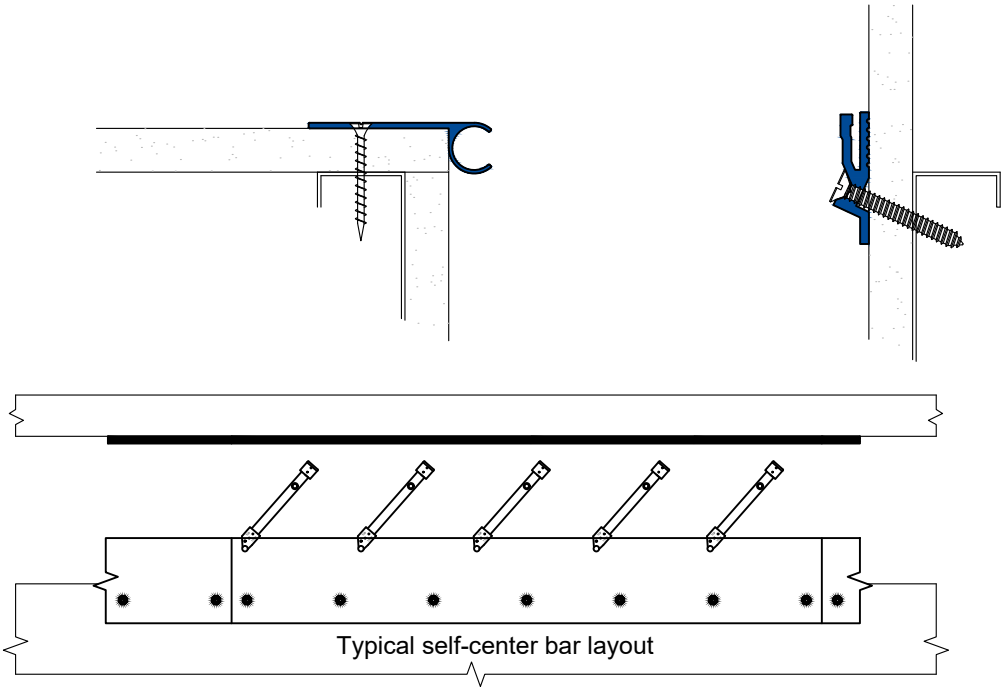

6 As you install aluminum base member sections, slide self-center bars into circular cavities.Make sure that "TOP" indicator is facing out and that all bars are in same orientation. Utilizing duct tape or something simular put a small strip on bar to hold spacing at 24" o.c.

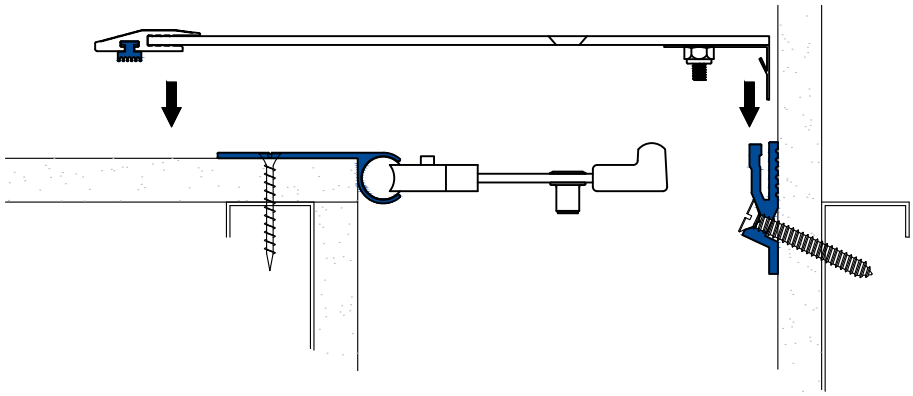

7 Snap lock coverplate with leaf spring assembly into cavity of wall mount.

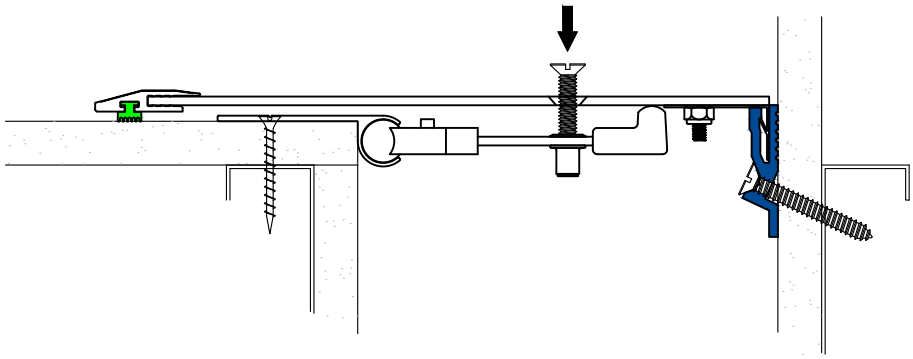

8 Center coverplate over joint opening, aligning the holes for the self-centering bars over the previously installed bars. Insert the 1/4" x 1 1/4" csk flathead machine screw through the cover into self-centering bars. Tighten to create measurable tension in bar.